TOTO®

CST244EF

Entrada™ Close Coupled Toilet, 1.28GPF

FEATURES

- E-Max flushing system, high efficiency (1.28GPF/4.8LPF)
- Elongated bowl
- Universal Height
- ADA compliant
- Close coupled, elongated front bowl and tank set, less toilet seat
- Chrome trip lever
- 12" Rough-in

MODELS

- CST244EF

COMPONENTS

- C244EF - Elongated Front Bowl
- ST243E - Tank and Cover only

- SS114 SoftClose® seat (sold separately)

COLORS/FINISHES

- Standard
  #01 Cotton

PRODUCT SPECIFICATION

The two-piece, universal height, high efficiency E-Max flushing system toilet shall be 1.28GPF. Toilet shall have high-profile tank, elongated bowl and chrome trip lever. Toilet shall be ADA compliant and universal height. Toilet shall be TOTO Model CST244EF____.

E-MAX™ FLUSHING SYSTEM BY TOTO®

CODES/STANDARDS

- Meets and exceeds ASME A112.19.2/CSA B45.1
- Certifications: IAPMO(cUPC)
- Code compliance: UPC, IPC, NSPC, NPC Canada, and others
- ADA compliant (when installed with trip lever located on the approach side)

CST244EF

Entrada™ Close Coupled Toilet, 1.28GPF

SPECIFICATIONS

- Water Use — 1.28 GPF (4.8 LPF)
- Flush System — E-Max
- Min. Water Pressure — 8 psi (flowing)
- Water Surface — 8-3/8" x 10-1/2"
- Trap Diameter — 2-1/8"
- Rough-in — 12"
- Trap Seal — 2-3/8"
- Warranty — One Year Limited Warranty
- Material — Vitreous china
- Shipping Weight — C244EF - 53lbs
  ST243E - 24lbs
- Shipping Dimensions — C244EF - 28-1/2" x 16" W1 x 10-1/4" W2 x 17-3/4"

  ST243E - 16-1/2" x 8-1/4" x 15-3/4"

INSTALLATION NOTES

Back-to-Back Toilet Installations:
TOTO recommends the use of a nationally listed, double sanitary tee-wye only, in vertical waste stacks, in accordance with the stipulations noted in the majority of nationally recognized plumbing codes.

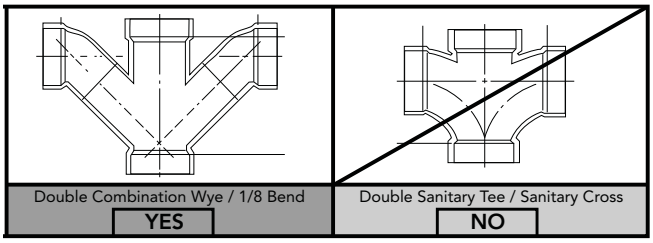

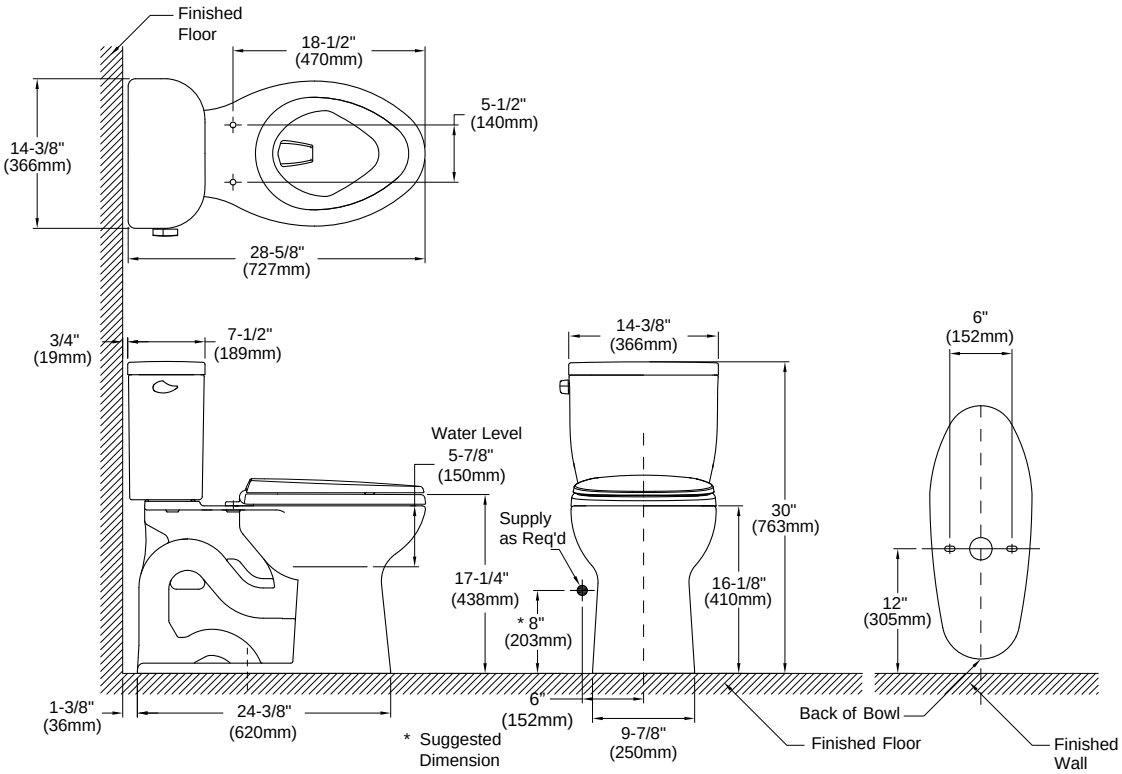

TOTO®

These dimensions and specifications are subject to change without notice

Ph: (888) 295-8134 | Fax: (800) 699-4889 | www.totousa.com

SS-00636 V.03

Printed in U.S.A. | © TOTO USA 02/13 | Printed on recycled paper ♻

RESIDENTIAL MOLDED WOOD TOILET SEAT

MODEL #	COLOR #
1500EC	WHITE

DESCRIPTION:

Closed front with cover, elongated, molded wood, multi-coat enamel finish toilet seat. Features two color-matched bumpers, color-matched Easy•Clean & Change® hinges with non-corrosive, top-tightening bolts and wing nuts.

SPECIFICATIONS:

Size:	Elongated
Material:	Molded Wood
Style:	Closed Front with Cover
Bumpers:	Two
Hinges:	Plastic Easy•Clean & Change®
Fastening System:	Non-Corrosive Bolts and Wing Nuts

FEATURES:

Easy•Clean & Change®

Non-Corrosive Bolts and Wing Nuts

PLASTIC EASY•CLEAN & CHANGE® HINGES

TWIST HINGES TO UNLOCK

EASY REMOVAL OF SEAT FOR THOROUGH CLEANING

NON-CORROSIVE BOLTS AND WING NUTS

DIMENSIONS:

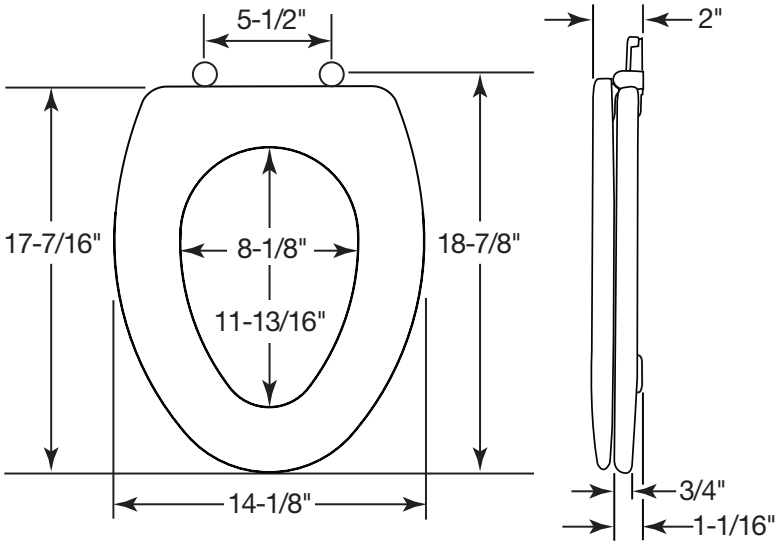

Proudly Made in the USA

Bemis Manufacturing Co., Sheboygan Falls, WI 53085
www.ToiletSeats.com

Phone: 800-558-7651 Fax: 800-292-3647